DISTINTA DELLE PARTI COSTITUENTI LE POMPE CENTRIFUGHE AUTOADESCANTI SERIE " J "

SPARE PARTS LIST FOR "J " SERIES SELF-PRIMING PUMPS

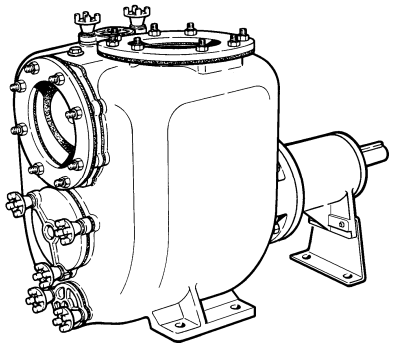

JS 8-300 G10 Code 1000 9534
JS 8-300 P10 Code 1001 9889
JS 8-300 Q10 Code 1000 9535
JS 8-300 B10 Code 1000 9538
JS 8-305 G10 Code 1000 9539
JS 8-305 T10 Code 1004 5978

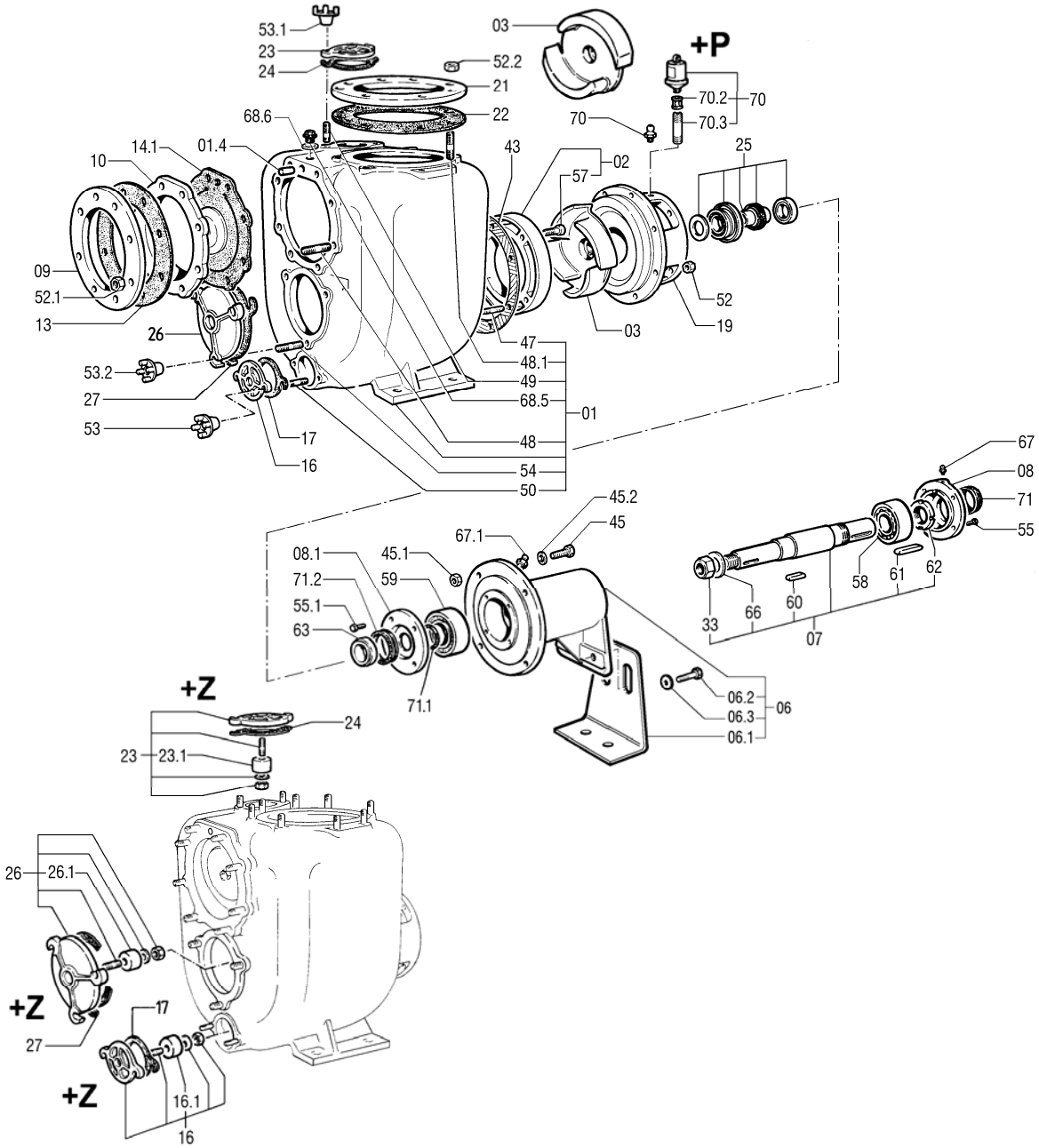

VARISCO S.p.A.
Terza Strada, 9 - Z.I. Nord - 35129 Padova - Italy
Tel. 049 82 94 111 +39 049 82 94 111
Fax 049 82 94 373 International +39 049 80 76 762

HEMPEL Antriebs Technik
+49 (2154) 4989-37 . pumpen@hem-net.de
varisco solid pumping solutions

Rif. N°. Pos. Nr.	Quant.	Denominazione	Part name	Den. Comm. Type	Mat.*	Codice Nuovo New Part No.	JS 8-300 G10	JS 8-300 P10	JS 8-300 Q10	JS 8-300 B10	JS 8-305 G10	JS 8-305 T10
01	1	Corpo (1)	Casing (1)		G	1002 0446	○	○			○	
					G	1002 0448			○			
					G+QPQ	1005 3312						○
					B	1002 0447				○		
01.4 (*)	1	Spina	Spring pin	UNI 6873 5 x 10	S		○	○	○	○	○	○
02	1	Piatto d'usura (2)	Wear plate (2)		GN	1000 8449	○	○				
					GN	1000 8454					○	
					G+QPQ	1004 8003						○
					B	1000 8397			○	○		
					G	1000 8423		○				
03	1	Girante	Impeller		G	1000 5308	○	○				
					G	1000 5362					○	
					G+QPQ	1004 5974						○
					B	1000 5214			○	○		
06	1	Supporto (3)	Bearing housing (3)		G	1000 9078	○	○	○	○	○	○
06.1	1	Piede supporto	Base		S	1000 4165	○	○	○	○	○	○
06.2	2	Vite	Screw	M16 x 35 DIN 933	S	1000 1972	○	○	○	○	○	○
06.3	2	Rondella	Washer	M 16 DIN 125 A	S	1000 1693	○	○	○	○	○	○
07	1	Albero (4)	Shaft (4)		S	1000 7569	○	○			○	○
					K9	1000 7609			○	○		
08	1	Copricuscinetto	Bearing cover		G	1000 4780	○	○	○	○	○	○
08.1	1	Copricuscinetto	Bearing cover		G	1000 4781	○	○	○	○	○	○
09	1	Flangia	Flange	DN 200 UNI 6082	S	1000 1483	○	○	○	○	○	○
10	1	Portavalvola	Suction flange		G	1001 4263	○	○			○	○
					B	1001 4460			○	○		
13 (**)	1	Guarnizione	Gasket									
14.1	1	Valvola completa	Check valve ass.		NG	1000 9028	○	○	○		○	○
					NB	1000 9027				○		
16	1	Portina	Cover		G	1000 6474	○	○			○	○
					GZ	1000 8503	+Z	+Z	○		+Z	
					B	1000 6468				○		
16.1	2	Placca zinco	Zinc anode		Z	1000 3810	+Z	+Z			+Z	
17	1	Guarnizione	Gasket									
19	1	Portamotore	Head		G	1000 6309	○	○	○		○	
					G+QPQ	1004 5976						○
					B	1000 6282				○		
21	1	Flangia	Flange	DN 200 UNI 6082	S	1000 1483	○	○	○	○	○	○
22	1	Guarnizione	Gasket									
23	1	Portina	Cover		G	1000 6475	○	○			○	○
					GZ	1000 8504	+Z	+Z	○		+Z	
					B	1000 6468				○		
23.1	2	Placca zinco	Zinc anode		Z	1000 3810	+Z	+Z	○		+Z	
24	1	Guarnizione	Gasket									
25	1	Anello di tenuta compl.	Mechanical seal ass.	T50 YYN		1002 0623	○			○	○	○
				T50 YYV		1002 0625		○	○			
26	1	Portina	Cover		G	1000 6477	○	○			○	○
					GZ	1000 8505	+Z	+Z	○		+Z	
					OTS	1000 3751				○		
26.1	2	Placca zinco	Zinc anode		Z	1000 3810	+Z	+Z	○		+Z	
27	1	Guarnizione	Gasket									
33	1	Dado blocca girante	Impeller nut	M 30 x 2 UNI 7474	H	1000 1466	○	○			○	○
					K	1000 1473			○	○		
43 (**)	2	Guarnizione corpo	Casing gasket	306 x 384 x 0,3								
45	4	Vite	Screw	M 16 x 55 DIN 931	S	1000 1992	○	○			○	○
				M 16 x 55 DIN 933	K	1000 2071			○	○		
				M 16 x 35 DIN 933	S	1000 1972						
45.1	4	Dado	Nut	M 16 DIN 934	S	1000 1425	○	○			○	○
					K	1000 1442			○	○		
45.2	4	Rondella	Washer	M 16 UNI 1751/52 A	S	1000 1683	○	○		○	○	○
				M 16 DIN 127	K	1000 1686			○			
47 (*)	8	Prigioniero	Stud	M 16 x 35 DIN 938	S		○	○			○	○
				M 16 x 35 DIN 938	K				○	○		
48 (*)	8	Prigioniero	Stud	M 16 x 55 DIN 938	S		○	○			○	○
				M 16 x 55 DIN 938	K					○		
				M 16 x 60 DIN 938	K				○			

VARISCO S.p.A.
Terza Strada, 9 - Z.I. Nord - 35129 Padova - Italy
Tel. 049 82 94 111 +39 049 82 94 111
Fax 049 82 94 373 International +39 049 80 76 762

HEMPEL Antriebs Technik
+49 (2154) 4989-37 . pumpen@hem-net.de
varisco solid pumping solutions

Rif. N°. Pos. Nr.	Quant.	Denominazione	Part name	Den. Comm. Type	Mat.*	Codice Nuovo New Part No.	JS 8-300 G10	JS 8-300 P10	JS 8-300 Q10	JS 8-300 B10	JS 8-305 G10	JS 8-305 T10
48.1 (*)	8	Prigioniero	Stud	M 16 x 35 DIN 938	S		O	O			O	O
				M 16 x 35 DIN 938	K				O	O		
49 (*)	2	Prigioniero	Stud	M 12 x 35 DIN 938	S		O	O			O	O
				M 12 x 30 DIN 938	K					O		
				M 12 x 35 DIN 938	K				O			
50 (*)	2	Prigioniero	Stud	M 10 x 30 DIN 938	S		O	O			O	O
				M 12 x 35 DIN 938	K					O		
				M 10 x 30 DIN 938	K				O			
52 (*)	8	Dado	Nut	M 16 DIN 934	S		O	O			O	O
					K				O	O		
52.1 (*)	8	Dado	Nut	M 16 DIN 934	S		O	O			O	O
					K				O	O		
52.2 (*)	8	Dado	Nut	M 16 DIN 934	S		O	O			O	O
					K				O	O		
53 (*)	2	Maniglietta	Wrench	M 10	OTS		O	O	O		O	O
				M 12	OTS					O		
53.1 (*)	2	Maniglietta	Wrench	M 12	OTS		O	O	O	O	O	O
53.2 (*)	3	Maniglietta	Wrench	M 12	OTS		O	O	O	O	O	O
54 (*)	3	Prigioniero	Stud	M 12 x 35 DIN 938	S		O	O			O	O
				M 12 x 30 DIN 938	K					O		
				M 12 x 35 DIN 938	K				O			
55	4	Vite	Screw	M 8 x 20 DIN 933	S	1000 1937	O	O	O	O	O	O
55.1	4	Vite	Screw	M 8 x 20 DIN 933	S	1000 1937	O	O	O	O	O	O
57 (*)	4	Vite	Screw	M 12 x 60 DIN 912	H		O	O	O	O	O	O
58	1	Cuscinetto	Ball bearing	3310 HT		1000 1388	O	O	O	O	O	O
59	1	Cuscinetto	Ball bearing	NU 310 E		1000 1339	O	O	O	O	O	O
60	1	Linguetta	Key	12 x 8 x 45 DIN6885A	K	1000 1637	O	O	O	O	O	O
61	1	Linguetta	Key	12 x 8 x 90 DIN6885A	S	1000 1600	O	O	O	O	O	O
62	1	Ghiera	Lock ring	M 50	S	1000 1575	O	O	O	O	O	O
63	1	Ghiera	Lock ring	42 x 60 x 19	S	1000 4184	O	O	O	O	O	O
66	1	Rondella	Washer	M 30 DIN 125 A	H	1000 1716	O	O			O	O
					K	1000 1715			O	O		
67	1	Ingrassatore	Grease nipple	M 6		1000 1664	O	O	O	O	O	O
67.1	1	Ingrassatore	Grease nipple	¼"		1000 1662	O	O	O	O	O	O
68.5 (*)	1	Tappo	Plug	¼"	G		O	O	O		O	O
					K					O		
68.6 (**)	1	Guarnizione	Gasket	¼" DIN 908								
70 (*)	1	Ingrassatore	Grease nipple	¼"			O	O	O	O	O	O
		Cartuccia Perma (6)	Perma cartridge (6)	¼"		1000 1666	+P	+P	+P	+P	+P	+P
70.2	1	Manicotto	Union	¼"	G	1000 2352	+P	+P	+P	+P	+P	+P
70.3	1	Prolunga	Grease tube	¼"	S	1000 6955	+P	+P	+P	+P	+P	+P
71	1	V-ring	V-ring	V 45 S	N	1000 1296	O	O	O	O	O	O
71.1	1	O-Ring	O-Ring	OR 147	N	1000 1207	O	O	O	O	O	O
71.2	1	V-ring	V-ring	V 60 S	N	1000 1297	O	O	O	O	O	O
(*)		Serie viterie	Set of screws			1004 3676	O	O			O	O
						1004 3678			O			
						1001 4462				O		
(**)		Serie guarnizioni	Set of gaskets		N	1004 3677	O				O	O
					N	1001 4463				O		
					V	1001 9410		O	O			
+P***		Kit ingrassatore	Compl. Grease kit			1000 8316	O	O	O	O	O	O
+Z***		Kit portine	Set of couver		GZ	1001 4027	O	O			O	

***		Optional

VARISCO S.p.A.
Terza Strada, 9 - Z.I. Nord - 35129 Padova - Italy
Tel. 049 82 94 111 +39 049 82 94 111
Fax 049 82 94 373 International +39 049 80 76 762

HEMPEL Antriebs Technik
+49 (2154) 4989-37 . pumpen@hem-net.de
varisco solid pumping solutions

Note:			**Notes:**	
1) Completo di prigionieri (47, 48, 48.1, 49, 50, 54) e tappo (68.5).			1) Complete with studs (47, 48, 48.1, 49, 50, 54) and plug (68.5).	
2) Completo di viti (57).			2) Complete with screws (57).	
3) Completo di piede supp. (06.1), viti (06.2) e rondelle (06.3).			3) Complete with base (06.1), screw (06.2) and washer (06.3).	
4) Completo di dado (33), rondella (66), linguette (60,61), e ghiera (62).			4) Complete with nut (33), washer (66), keys (60, 61) and lock ring (62).	
* Materiali di costruzione			* Construction materials	
B	= Bronzo		B	= Bronze
G	= Ghisa		G	= Cast iron
G+QPQ	= Ghisa+trattamento QPQ		G+QPQ	= Cast iron+ Quench Polish Quench
H	= Acciaio inox AISI 304		H	= AISI 304 stainless steel
K	= Acciaio inox AISI 316		K	= AISI 316 stainless steel
K9	= Acciaio inox AISI 329		K9	= AISI 329 stainless steel
N	= Gomma nitrile		N	= Nitrile rubber
OTS	= Ottone		OTS	= Brass
S	= Acciaio		S	= Steel
V	= Viton		V	= Viton
Z	= Zinco		Z	= Zinc
Ordinare il materiale indicando sempre la quantità, la denominazione, il codice del pezzo, il tipo ed il numero della pompa.			When ordering spares always indicate type and serial number of pump, quantity, part name, and number.	

VARISCO S.p.A.
Terza Strada, 9 - Z.I. Nord - 35129 Padova - Italy
Tel. 049 82 94 111 +39 049 82 94 111
Fax 049 82 94 373 International +39 049 80 76 762

HEMPEL Antriebs Technik
+49 (2154) 4989-37 . pumpen@hem-net.de
varisco solid pumping solutions