JS 3-210 G10

Bare shaft - Qmax 125 m³/h (550 USGPM) - Hmax 30 m (98 ft)



Indicative picture od the product

Product data

Pump model	JS 3-210 G10
Qmax	125 m³/h - 2.080 l/min (600 USGPM)
Hmax	30 m (98 ft)
Suction port	threaded - 3" BSP
Delivery port	threaded - 3" BSP
Impeller type	semi-open, 3 vane
Solids handling	40 mm
Casing	EN-GJL-200 cast iron
Impeller	EN-GJS-500 cast iron
Wear plates	EN-GJL-200 rubber lined cast iron
Non-return valve	check-valve, NBR
Shaft	C45 steel
Mechanical seal	Silicon carbide / Silicon carbide
Elastomers	NBR
Lubrication	grease
Coatings	bicomponent, av. thickness 80 µm
Color	RAL 5010 blue (standard)
Weight	75 kg (170 lb)

J

Self-priming centrifugal pumps

The **J series self-priming centrifugal** pumps are for applications where the main feature is the **difficulty in priming**: even with suction heights of several meters the machine quickly evacuates the air from the suction pipe and starts pumping. Furthermore, compared to other pumps, the **semi-open impeller** makes the J suitable for pumping liquids with **solids** in suspension.

Optionals

3" NPT threaded ports
DN 80 EN 1092-1 flanged ports
ANSI B16.5 flanged ports
Automatic lubrication system with grease cartridge

Benefits

Rapid self-priming
without foot valve up to a height of 7.5 m (24.5 ft)

High resistance
to abrasive liquids and turbid sandy waters

Semi-open impeller
solids handling up to 40 mm (1.6")

Wear plates
in cast iron lined with abrasion resistant rubber, easily replaceable, front and rear to the impeller

Easy maintenance
removable front cover for direct access to the impeller and eventual unclogging

Dimensions

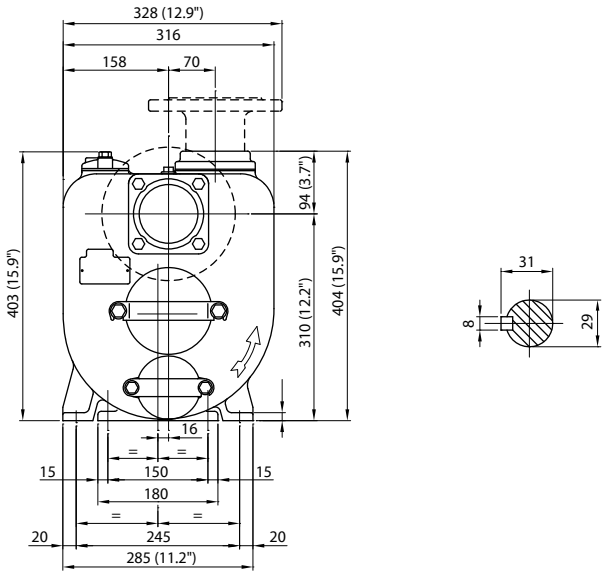

JS 3-210 G10

Performance curves

Test according to UNI EN ISO 9906 standard - level 2
Test liquid: clean water, density 1,000 kg/m³
Spherical solids handling: D.40 mm (1.6")

Priming time: 35 s from 1,5 m (4.9 ft)
Max absorbed power: 8,5 kW - 11.4 HP (2.000 rpm)
Electric motor power: 4,0 kW - 5,5 HP (1450 rpm) / 7,5 kW - 10 HP (1750 rpm)

Recommended operating range

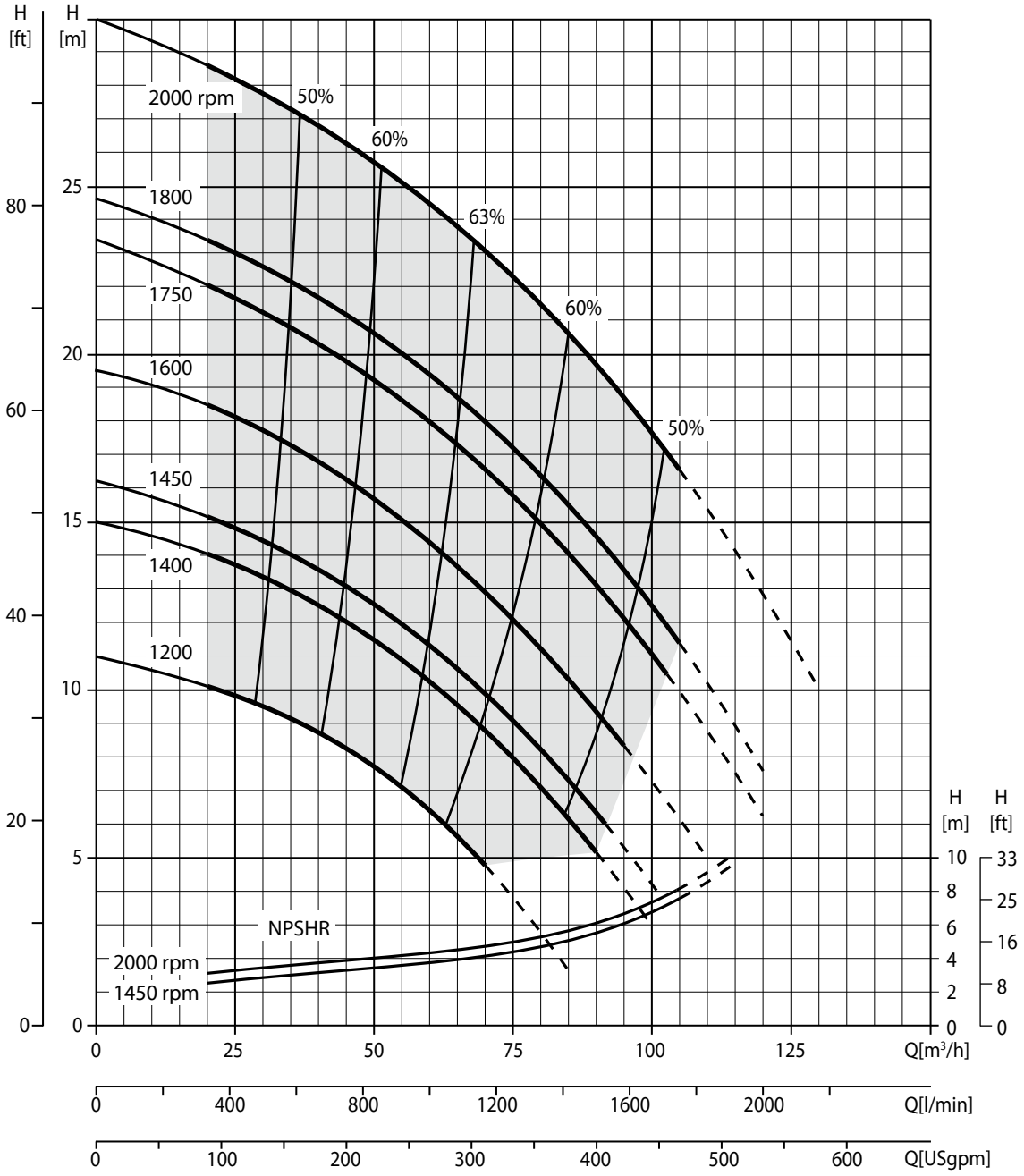

EN ISO 9001:2008 REG. NO 44 100 091767

Varisco S.p.A. has certified its Quality Management System in accordance with the requirements of the ISO 9001:2008 international standards. The quality of the product comes from the quality of the processes: standardise activities, enhance human resources, pursue a logic of continuous improvement aiming for the constant satisfaction of its Customers.

Varisco S.p.A. Terza strada, 9 - Z.I. Nord 35129 PADOVA - Italy tel +39 049 8294 111 fax +39 049 80 76 762 export@variscospa.com

www.variscospa.com

Varisco S.p.A. reserves the right to modify anytime and without prior notice the data of this document.