JS 2-170 G10

Qmax 50 m³/h - 833 l/min (220 USgpm) - Hmax 58 m (190 ft)

Code 10042199



Indicative picture of the product

Product Data

Suction port
Threaded - 2" ISO 228 (BSP)

Delivery port
Threaded - 2" ISO 228 (BSP)

Qmax
50 m³/h - 833 l/min (220 USgpm)

Hmax
58 m (190 ft)

Solids handling
13 mm (0.5 ")

Weight
51 kg (112 lb)

EX version

Pump with dedicated code, including thermowell predisposition for temperature sensor and glass oiler for mechanical seal quench fluid, according to **ATEX 2014/34/EU.**

Self-priming centrifugal bare shaft pump

Characteristics

The J series self-priming centrifugal pumps are used in applications where a rapid priming capacity is required from demanding suction heights combined with the ability to transfer and manage polluted fluids, dirty and abrasives with suspended large diameter solids. The system is based on an inspectable pump casing which also acts as a water tank allowing a first quick priming without auxiliary systems, simplifying management of the system and reducing the time for maintenance. Within the physically permitted suction height limits, J pumps are a more comfortable and reliable solution than submersible pumps and vertical submersed impeller pumps.

Benefits

1) Rapid self-priming
Without foot valve up to a height of 7.5 m (24.5 ft)

2) High resistance
To abrasive liquids which are turbid and sandy

3) Semi-open impeller
High thickness casting impact resistant

4) Wear plate/plates
Easily replaceable cast iron wear plate/plates

5) Easy inspection and cleaning
Removable front covers for access to the impeller

Applications

Industry:
clean, dirty, sandy, muddy, neutral, alkaline, acidic liquids; low viscous petroleum products, solvents even if dirty; milk of lime, caustic soda; washing, cooling, recirculation, smoke scrubbing.

Treatment:
pumping polluted corrosive wastewater containing sand, mud or solids in suspension; dosing neutralizing liquids; pumping out settled sludge.

Naval:
loading and unloading; bilge pumping; washing, fire-fighting, stripping, sanitary duty and circulation.

Agriculture:
surface irrigation; liquid manure oxygenation; transfer and spraying liquid manure or fertilizers; distribution of liquid animal feed; transfer of wine must; washing.

Varisco S.r.l. has certified its Quality, Environment and Safety Management System in accordance with the requirements of the international standard ISO 9001-14001-45001, recognized by the Lloyd Register.

Specification is subject to change without prior notice. Please check with your Varisco representative for the latest specifications.
Document release date: September 9th 2024

JS 2-170 G10

PERFORMANCE CURVES

Test according to **UNI EN ISO 9906 standard - level 2B**
Test liquid: **clean water, density 1.000 kg/m³**
Spherical solids handling: **D.13 mm (0.5 ")**

Max. applicable motor power: **11 kW - 15 HP**

Noise Curve

dB(A)=max noise level at 1 m

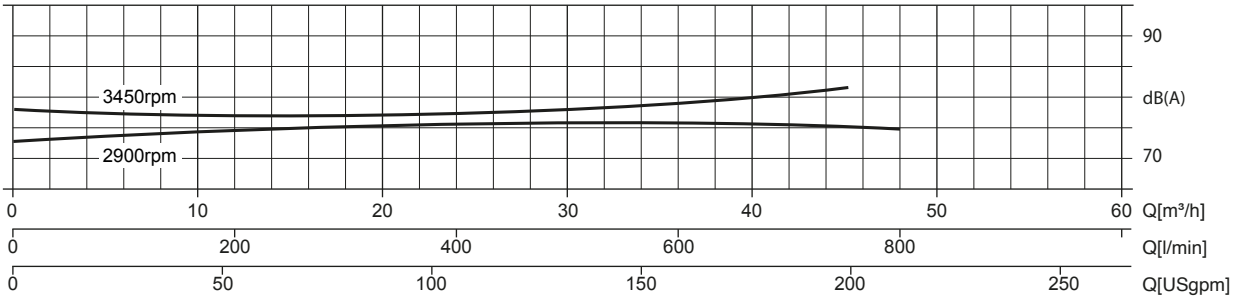

Multiple Speed Curve

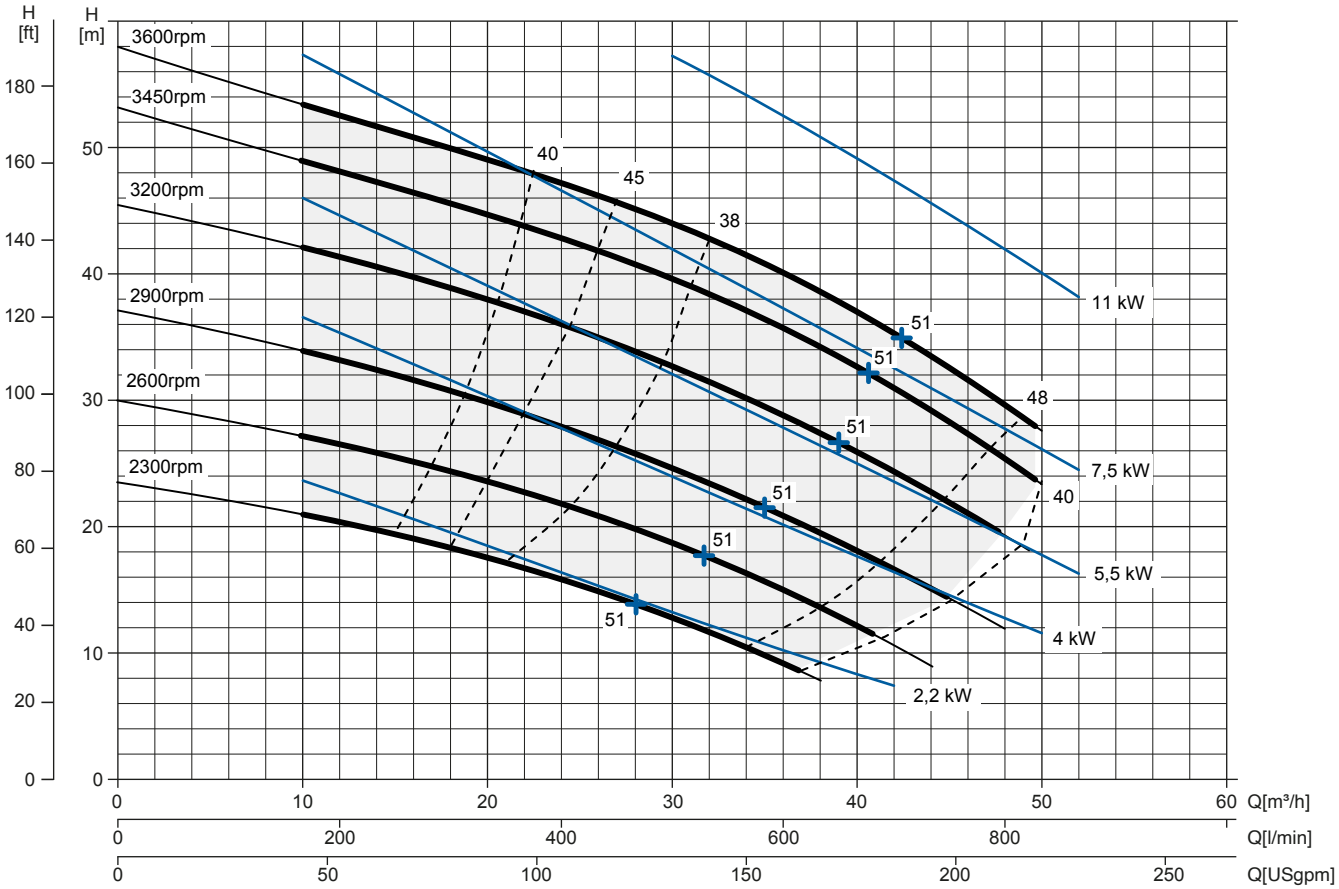

NPSHr Curve

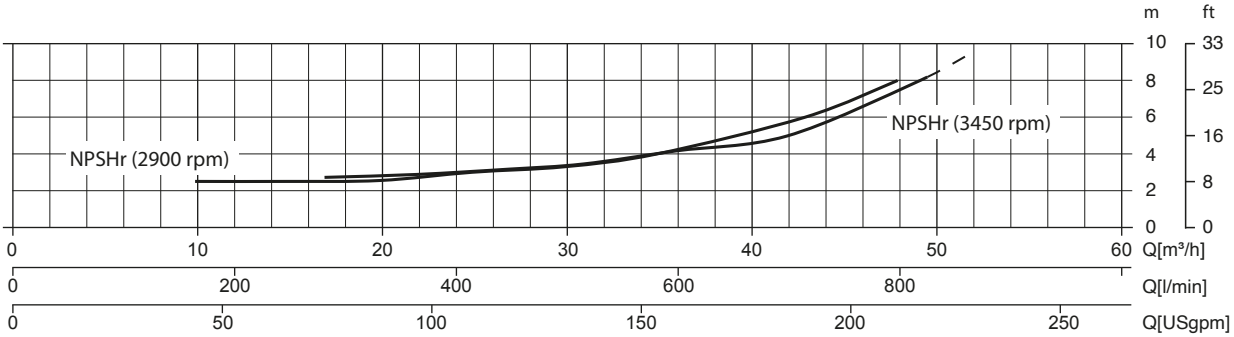

Specification is subject to change without prior notice. Please check with your Varisco representative for the latest specifications.
Document release date: September 9th 2024

JS 2-170 G10

TECHNICAL DATA

Pump

Pump model	JS 2-170 G10
Qmax [3.600 rpm]	50 m³/h - 833 l/min (220 USgpm)
Hmax [3.600 rpm]	58 m (190 ft)
Suction port	Threaded - 2" ISO 228 (BSP)
Delivery port	Threaded - 2" ISO 228 (BSP)
Impeller type	Semiaperta, 3 pale
Solids handling	13 mm (0.5 ")
Casing	EN 1561 EN-GJL-200 cast iron
Impeller	EN 1563 EN-GJS-500 cast iron
Wear plate	EN 1561 EN-GJL-200 rubberized cast iron
Non-return valve	check-valve, NBR
Shaft	C45E EN 10083-2 steel
Mechanical seal	Silicon carbide / Silicon carbide
Elastomers	NBR
Lubrication	Grease
Bearing bracket	EN 1561 EN-GJL-200 cast iron, with grease lubricated ball bearings for life

Arrangement

Model	Bare shaft
Dimensions (L x W x H)*	294 x 545 x 388 mm (11.6 x 21.5 x 15.3")
Coating	Polyurethane enamel, average thickness of 100 µm
Color	RAL 5010 blue (standard)
Height connection	0,3 m (0,95 ft)

*without flanged ports

Optionals

Flanged ports DN50 PN16 EN1092-2 Type B	Complete pump set code available on request
Flanged ports 2" ANSI B16.1 Class 125 R.F.	Complete pump set code available on request
Automatic mechanical seal greaser	Code: 10008316
Thermocouple temperature sensor for ATEX pump	TC - Range temperature from 0 up to 300°C
Temperature sensors for ATEX pump	PT100 - Range temperature from 0 up to 300°C
Provision for flushing the area surrounding the mechanical seal with clean fluid	G11 version - Complete pump set code available on request

Weight

Net weight	51 kg (112 lb)
Gross weight (pump + packing)	64 kg (141 lb)

Specification is subject to change without prior notice. Please check with your Varisco representative for the latest specifications.
Document release date: September 9th 2024

JS 2-170 G10

DIMENSIONS

mm [in]

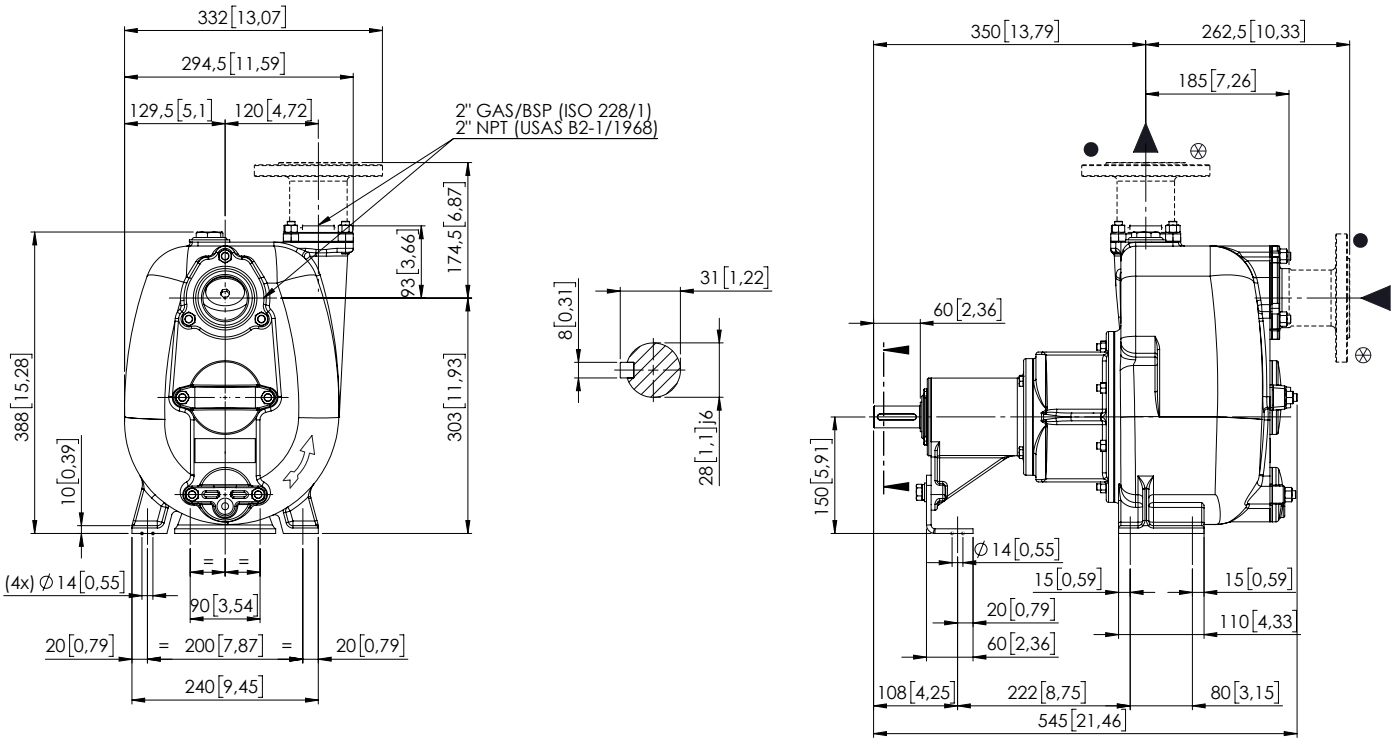

FLANGIATURA SU RICHIESTA / FLANGES ON REQUEST

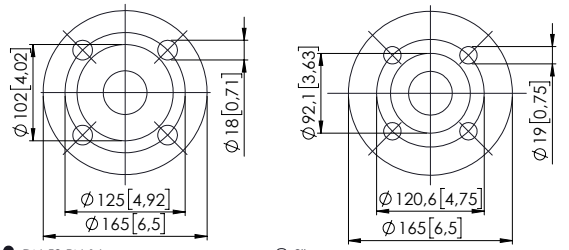

● DN 50 PN 16
CAST IRON EN 1092-2 TYPE B
STAINLESS STEEL EN 1092-1 TYPE B

⊗ 2"
CAST IRON ANSI B16.1 CLASS 125 R.F.
STAINLESS STEEL ANSI B16.5 CLASS 150 R.F.

PACKAGING DIMENSIONS

Dimensions

JS 2-170 G10 (L x W x H)	840 x 680 x 650 mm
Gross weight (pump + packing)	64 kg (141 lb)

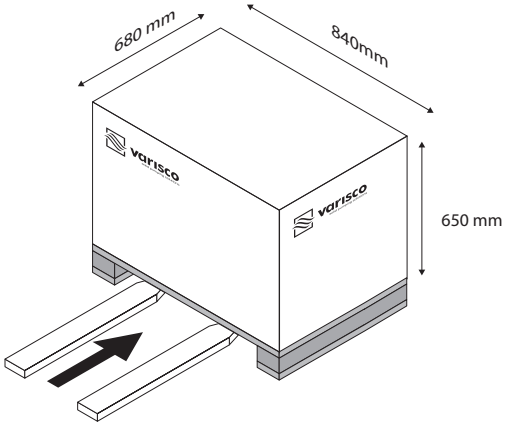

Specification is subject to change without prior notice. Please check with your Varisco representative for the latest specifications.
Document release date: September 9th 2024