# JE 3-180 B10 NT 21

## Electric - Qmax 85 m³/h - 1416 l/min (374 USgpm) - Hmax 52 m (170 ft)

Code 8381064110



Indicative picture of the product

## Product Data

Suction port
**Threaded - 3" ISO 228 (BSP)**

Delivery port
**Threaded - 3" ISO 228 (BSP)**

Qmax
**85 m³/h - 1416 l/min (374 USgpm)**

Hmax
**52 m (170 ft)**

Solids handling
**27 mm (1 ")**

Motor power
**7,5 kW - 10 HP**

Motor type
**IEC standard**
**Winding for inverters**
**Cast iron frame**

Motor brand
**WEG W22 Premium**

Weight
**185 kg**

# Close-coupled self-priming centrifugal pump with electric motor

## Characteristics

The J series self-priming centrifugal pumps are used in applications where a rapid priming capacity is required from demanding suction heights combined with the ability to transfer and manage polluted fluids, dirty and abrasives with suspended large diameter solids. The system is based on an inspectable pump casing which also acts as a water tank allowing a first quick priming without auxiliary systems, simplifying management of the system and reducing the time for maintenance. Within the physically permitted suction height limits, J pumps are a more comfortable and reliable solution than submersible pumps and vertical submersed impeller pumps.

## Benefits

**1) Rapid self-priming**
Without foot valve up to a height of 7.5 m (24.5 ft)

**2) High resistance**
To abrasive liquids which are turbid and sandy

**3) Semi-open impeller**
High thickness casting impact resistant

**4) Wear plate**
Easily replaceable stainless steel wear plate, front to the impeller

**5) Easy maintenance**
Removable front cover for direct access to the impeller

## Applications

**Industry:**
clean, dirty, sandy, muddy, neutral, alkaline, acidic liquids; low viscous petroleum products, solvents even if dirty; milk of lime, caustic soda; washing, cooling, recirculation, smoke scrubbing.

**Treatment:**
pumping polluted corrosive wastewater containing sand, mud or solids in suspension; dosing neutralizing liquids; pumping out settled sludge.

**Naval:**
loading and unloading; bilge pumping; washing, fire-fighting, stripping, sanitary duty and circulation.

**Agriculture:**
surface irrigation; liquid manure oxygenation; transfer and spraying liquid manure or fertilizers; distribution of liquid animal feed; transfer of wine must; washing.

Varisco S.r.l. has certified its Quality, Environment and Safety Management System in accordance with the requirements of the international standard ISO 9001-14001-45001, recognized by the Lloyd Register.

# JE 3-180 B10 NT 21

## PERFORMANCE CURVES

Test according to **UNI EN ISO 9906 standard - level 2B**
Test liquid: **clean water, density 1.000 kg/m³**
Spherical solids handling: **D.27 mm (1 ")**

Priming time (2.900 rpm): **26s from 1,5 m (5 ft)**
Installed power: **7,5 kW - 10 HP (2900 rpm)**

## Noise Curve

dB(A)=max noise level at 1 m

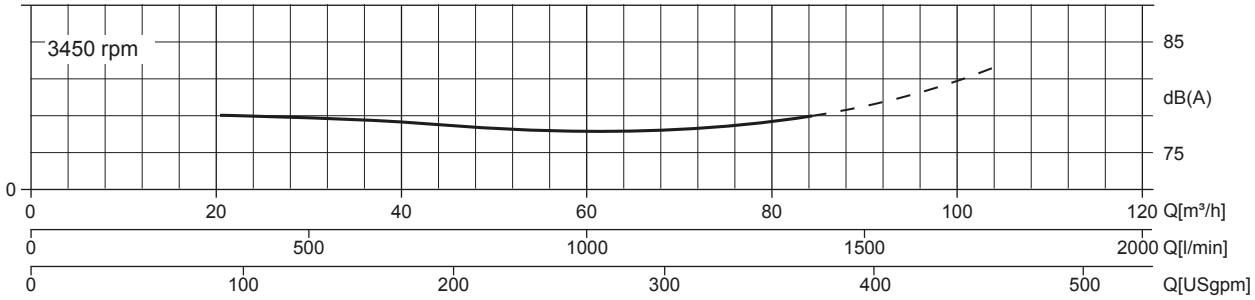


## Multiple Speed Curve

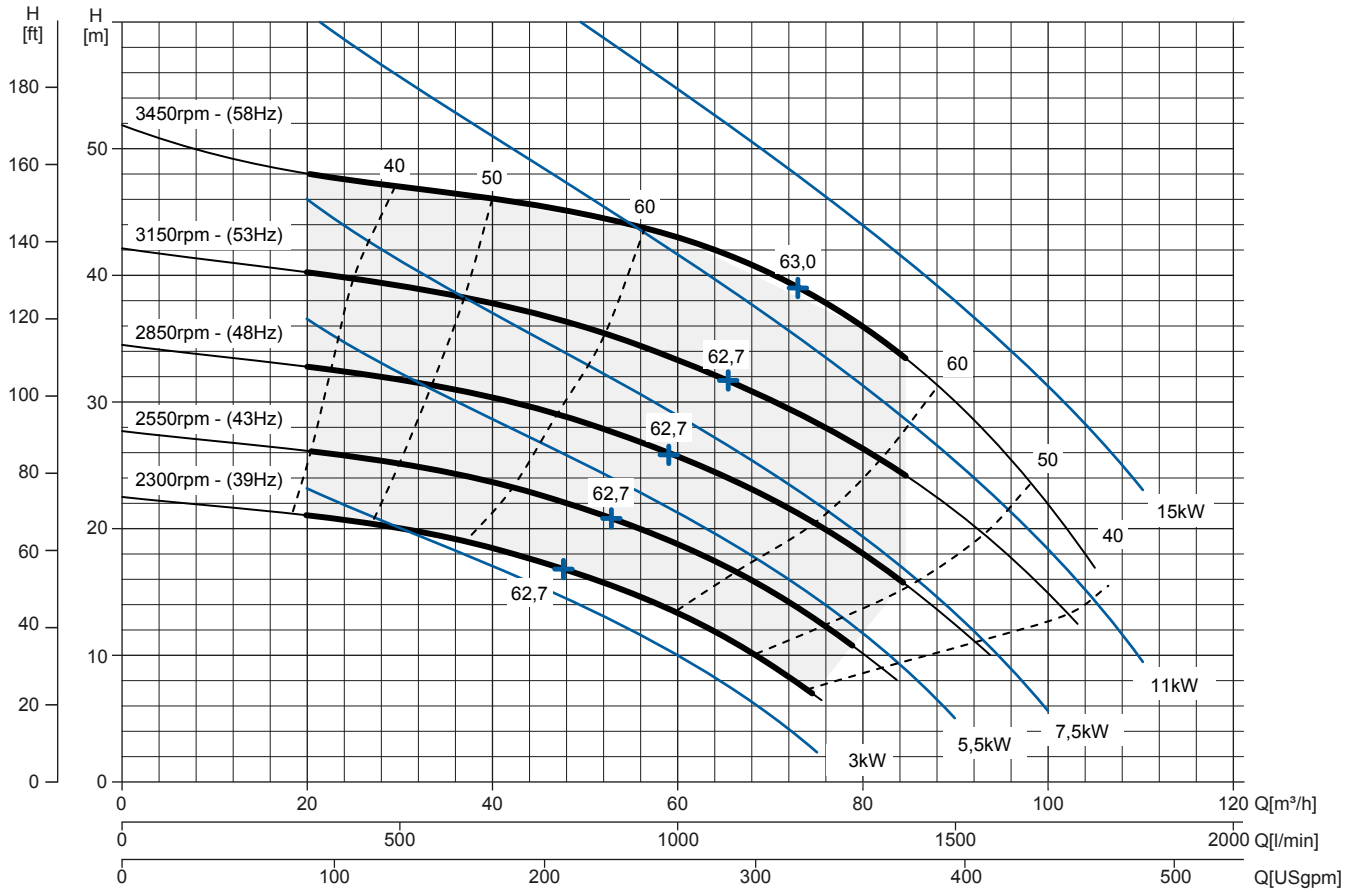


## NPSHr Curve

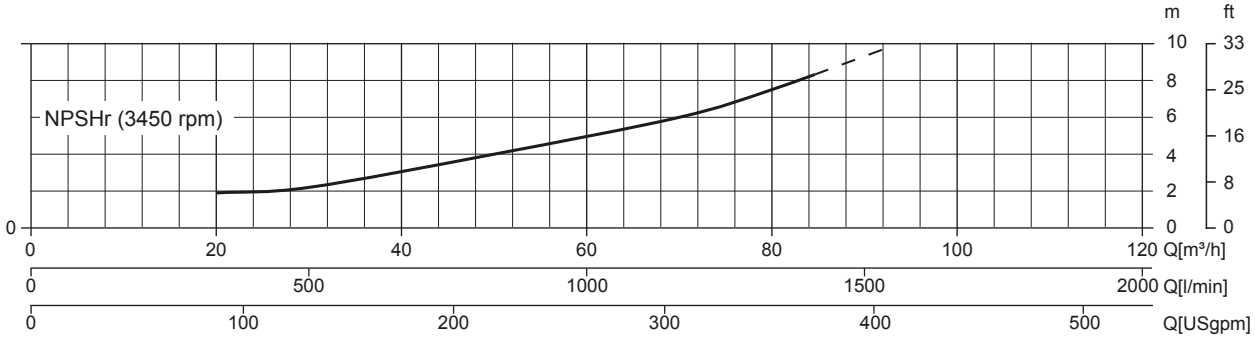


Data sheet: code 8381064110 © Varisco S.r.l. 2021

# JE 3-180 B10 NT 21

## TECHNICAL DATA

### Pump

| | |
|---|---|
| Pump model | J 3-180 B10 |
| Qmax [2,900 rpm] | 85 m³/h - 1416 l/min (374 USgpm) |
| Hmax [2,900 rpm] | 52 m (170 ft) |
| Suction port | Threaded - 3" ISO 228 (BSP) |
| Delivery port | Threaded - 3" ISO 228 (BSP) |
| Impeller type | Semi-open, 3 vanes |
| Solids handling | 27 mm (1 ") |
| Casing | stainless steel ASTM A351 CF3M + zinc anodes |
| Impeller | stainless steel inox ASTM A351 CF3M |
| Wear plate | stainless steel ASTM A351 CF3M |
| Non-return valve | Check-valve, FKM |
| Shaft | Stainless steel SAF 2205 |
| Mechanical seal | Silicon carbide / Silicon carbide |
| Elastomers | FKM |
| Lubrication | Grease |

### Motor

| | | | |
|---|---|---|---|
| Mains supply (Three-phase) | 380 VD/660 VY ± 5% | 400 VD/690 VY ± 10% | 415 VD ± 5% |
| Frequency (Nominal speed) | | **50 Hz ± 3% / 2.900 rpm** | |
| Absorbed current | 14,4/8,27 A | 14,1/8,18 A | 13,9/8,02 A |
| Starting Current Is/In | 8 | 8.5 | 9 |
| Efficiency (100%) | 90,1% ( IE3 ) | 90,3% ( IE3 ) | 90,3% ( IE3 ) |
| Model | | WEG W22 Premium | |
| Standards | | IEC 60034-1 | |
| Construction | | cast iron, TEFC | |
| Mounting arrangement | | IM 2001 B35 | |
| No. poles | | 2 | |
| Rated power | | 7,5 kW - 10 HP | |
| Degree of protection | | IP55 | |
| Markings | | CE, UL, CSA, EAC | |
| Insulation class/Temperature | | F/80°K | |
| Duty type | | Continuous - S1<br>Variable - suitable for inverter use (30-50 Hz) | |
| Temperature sensors | | PTC, available as option | |

### Arrangement

| | |
|---|---|
| Model | Close-coupled N |
| Dimensions | 420 x 1015 x 533 mm (16 x 40 x 21") |
| Coating | Polyurethane enamel, average thickness of 100 µm |
| Color | RAL 5010 blue (standard) |
| Features | Close-coupled with rigid coupling “N” |
| Height connection | 0,3 m (13") |

### Optionals

| | |
|---|---|
| Flanged ports DN80 PN16 EN1092-1 Type B | cod. 10042791 |
| Flanged ports 3” ANSI B16.1 Class 125 R.F. | cod. 10042827 |
| Automatic mechanical seal greaser | cod. 10008316 |
| Integrated VSD motor inverter | Available by 2021 |

### Weight

| | |
|---|---|
| Net weight | 185 kg |

# JE 3-180 B10 NT 21

## DIMENSIONS

mm [in]

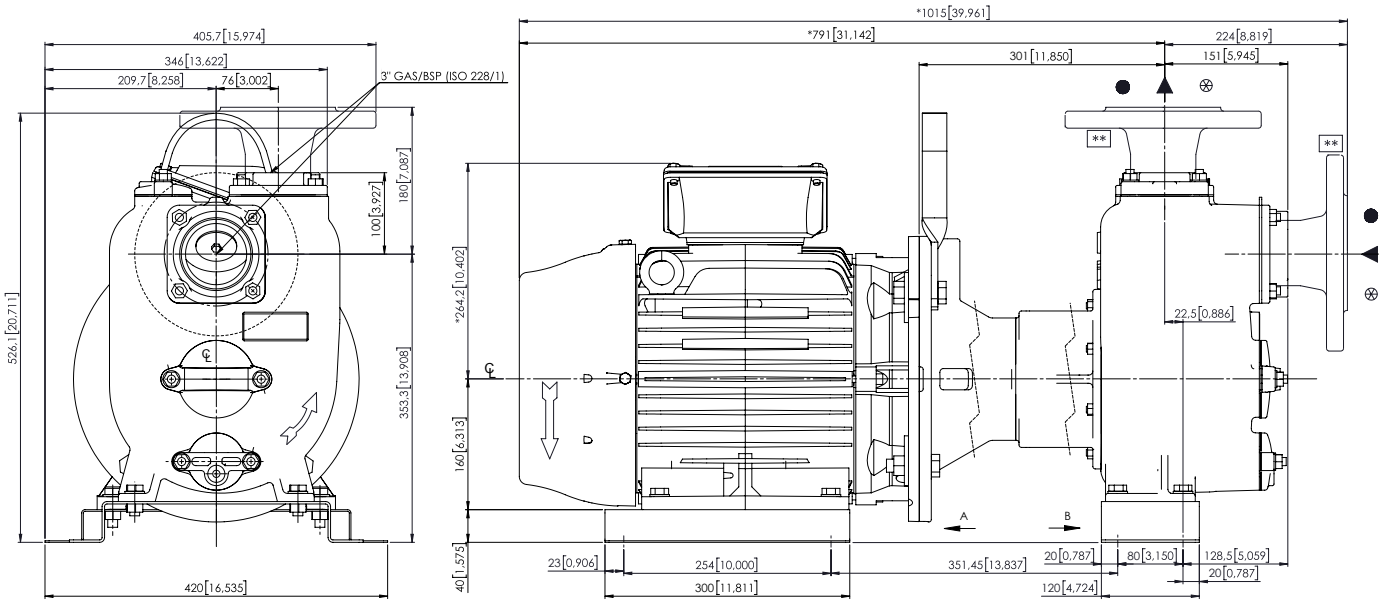


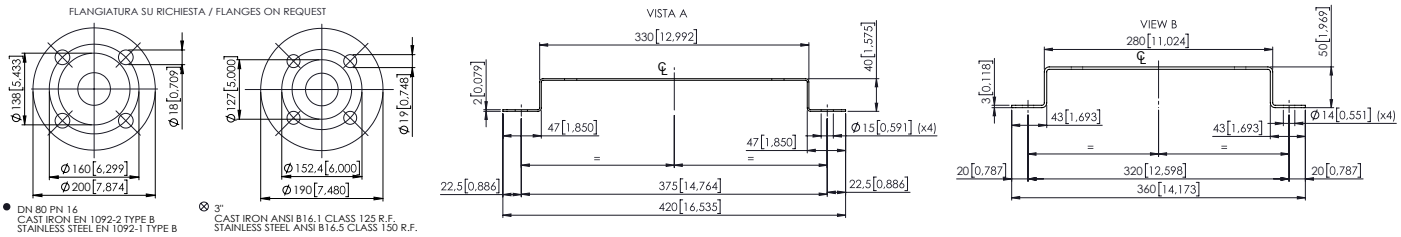


## PACKAGING DIMENSIONS

### Dimensions

| | |
|---|---|
| JE 3-180 B10 NT 21 (L x W x H mm) | 720 x 270 x 480 + BOX |
| Gross weight (pump + packing) | 197 Kg |

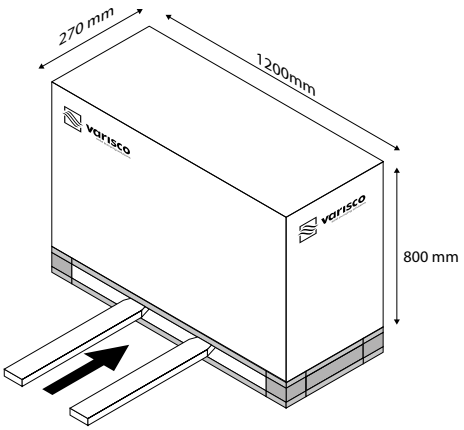


Data sheet: codice 8381064110 © Varisco S.r.l. 2021
Specification is subject to change without prior notice. Please check with your Varisco representative for the latest specifications.

HEMPEL Antriebs Technik
+49 (2154) 4989-37 . pumpen@hem-net.de
www.varisco.it