JE 2-170 G10 NT20

Electric - Qmax 45 m³/h - 750 l/min (198 USgpm) - Hmax 37 m (121 ft)

Code 8381063545



Indicative picture of the product

Product Data

Suction port
Threaded - 2" ISO 228 (BSP)

Delivery port
Threaded - 2" ISO 228 (BSP)

Qmax
45 m³/h - 750 l/min (198 USgpm)

Hmax
37 m (121 ft)

Solids handling
13 mm (0.5 ")

Motor power
4 kW - 5,5 HP

Motor type
IEC standard
Winding for inverters
Cast iron frame

Motor brand
WEG W22 Premium

Weight
119 kg

Close-coupled self-priming centrifugal pump with electric motor

Characteristics

The J series self-priming centrifugal pumps are used in applications where a rapid priming capacity is required from demanding suction heights combined with the ability to transfer and manage polluted fluids, dirty and abrasives with suspended large diameter solids. The system is based on an inspectable pump casing which also acts as a water tank allowing a first quick priming without auxiliary systems, simplifying management of the system and reducing the time for maintenance. Within the physically permitted suction height limits, J pumps are a more comfortable and reliable solution than submersible pumps and vertical submersed impeller pumps.

Benefits

1) Rapid self-priming
Without foot valve up to a height of 7.5 m (24.5 ft)

2) High resistance
To abrasive liquids which are turbid and sandy

3) Semi-open impeller
High thickness casting impact resistant

4) Wear plate
Easily replaceable cast iron wear plate, front to the impeller

5) Easy maintenance
Removable front cover for direct access to the impeller

Applications

Industry:
clean, dirty, sandy, muddy, neutral, alkaline, acidic liquids; low viscous petroleum products, solvents even if dirty; milk of lime, caustic soda; washing, cooling, recirculation, smoke scrubbing.

Treatment:
pumping polluted corrosive wastewater containing sand, mud or solids in suspension; dosing neutralizing liquids; pumping out settled sludge.

Naval:
loading and unloading; bilge pumping; washing, fire-fighting, stripping, sanitary duty and circulation.

Agriculture:
surface irrigation; liquid manure oxygenation; transfer and spraying liquid manure or fertilizers; distribution of liquid animal feed; transfer of wine must; washing.

Varisco S.r.l. has certified its Quality, Environment and Safety Management System in accordance with the requirements of the international standard ISO 9001-14001-45001, recognized by the Lloyd Register.

JE 2-170 G10 NT20

PERFORMANCE CURVES

Test according to **UNI EN ISO 9906 standard - level 2B**
Test liquid: **clean water, density 1.000 kg/m³**
Spherical solids handling: **D.13 mm (0.5 ")**

Priming time (2.900 rpm): **26s from 1,5 m (5 ft)**
Installed power: **4 kW - 5,5 HP (2900 rpm)**

Noise Curve

dB(A)=max noise level at 1 m

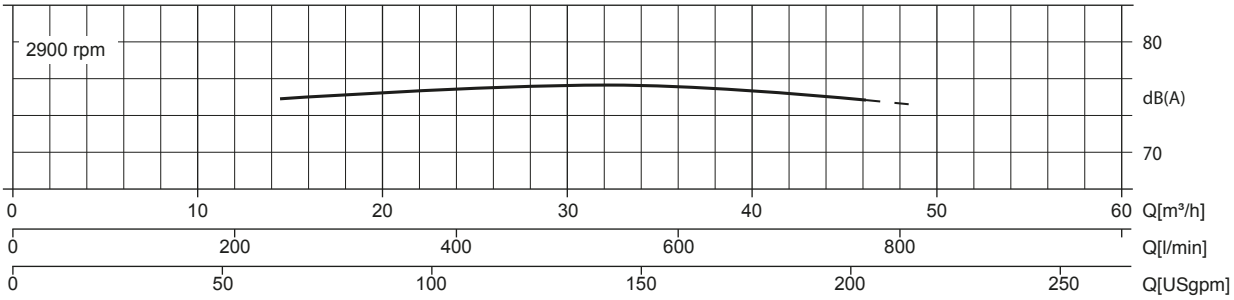

Multiple Speed Curve

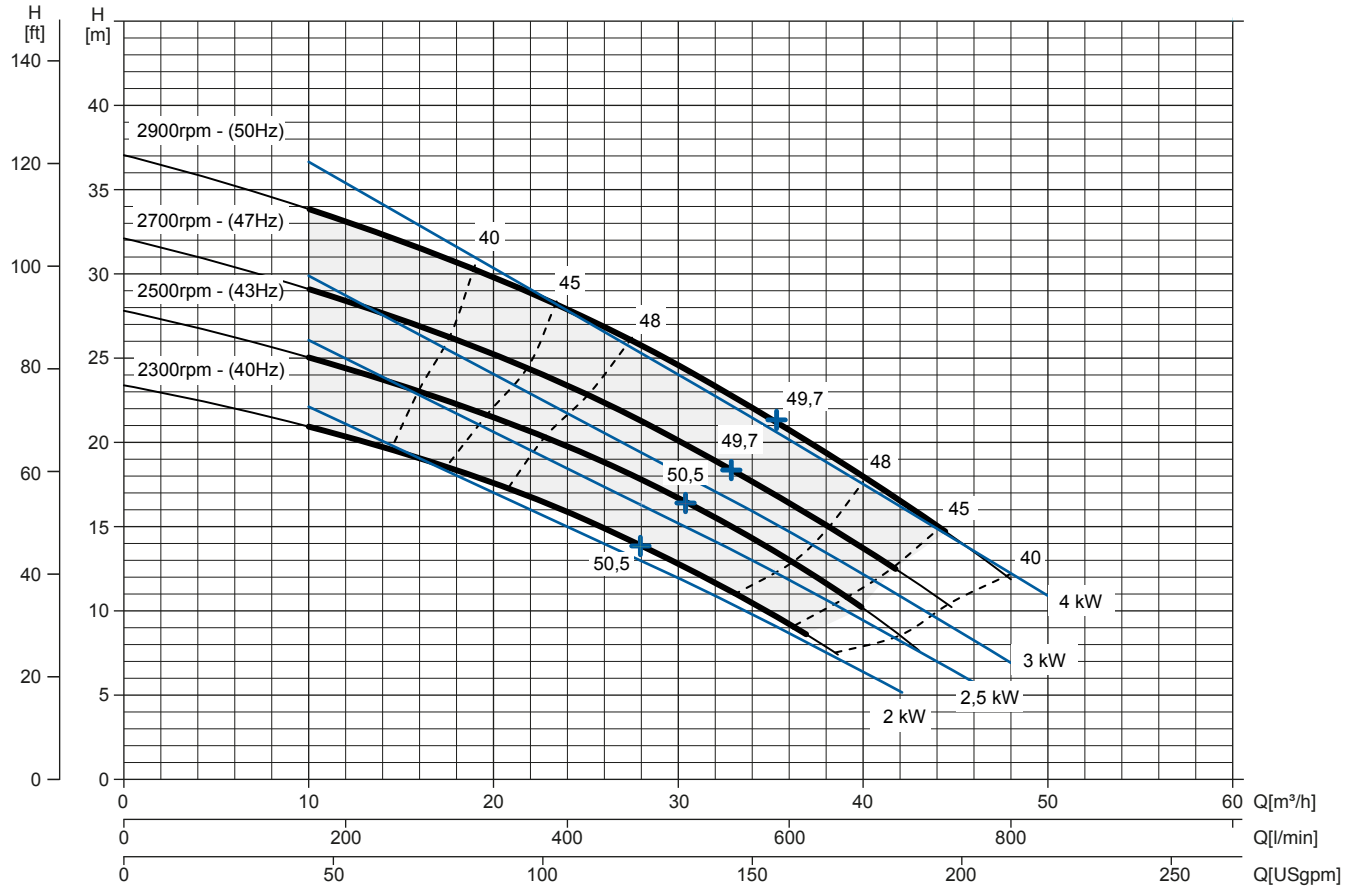

NPSHr Curve

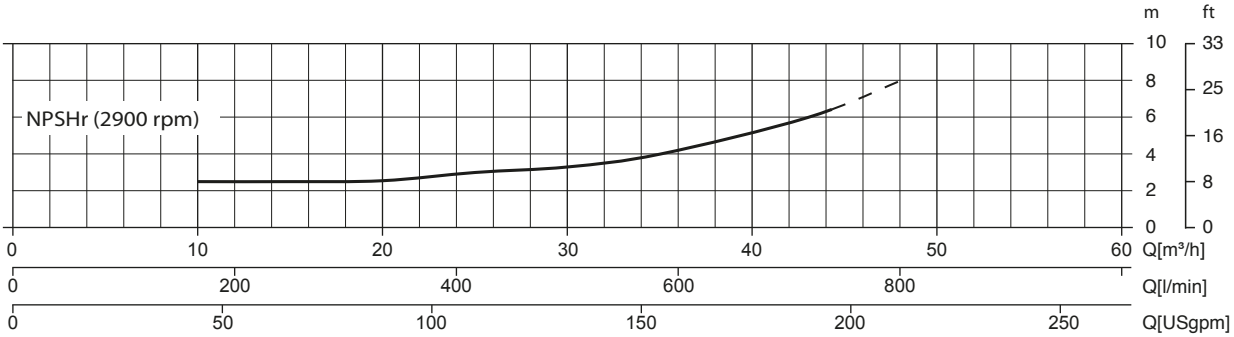

Data sheet: code 8381063545 © Varisco S.r.l. 2021

JE 2-170 G10 NT20

TECHNICAL DATA

Pump

Pump model	J 2-170 G10
Qmax [2,900 rpm]	45 m³/h - 750 l/min (198 USgpm)
Hmax [2,900 rpm]	37 m (121 ft)
Suction port	Threaded - 2" ISO 228 (BSP)
Delivery port	Threaded - 2" ISO 228 (BSP)
Impeller type	Semi-open, 3 vanes
Solids handling	13 mm (0.5 ")
Casing	cast iron EN 1561 EN-GJL-200
Impeller	cast iron EN 1563 EN-GJS-500
Wear plate	rubberized cast iron EN 1561 EN-GJL-200
Non-return valve	Check-valve, NBR
Shaft	Steel C45E EN 10083-2
Mechanical seal	Silicon carbide / Silicon carbide
Elastomers	NBR
Lubrication	Grease

Motor

Mains supply (Three-phase)	220 VD/380 VY ± 5%	230 VD/400 VY ± 10%	240 VD/415 VY ± 5%
Frequency (Nominal speed)		**50 Hz ± 3% / 2.900 rpm**	
Absorbed current	13,7/7,93 A	13,3/7,62 A	13/7,49 A
Starting Current Is/In	7.4	7.7	8
Efficiency (100%)	88,1% (IE3)	88,1% (IE3)	88,1% (IE3)
Model		WEG W22 Premium	
Standards		IEC 60034-1	
Construction		cast iron, TEFC	
Mounting arrangement		IM 2101 B34	
No. poles		2	
Rated power		4 kW - 5,5 HP	
Degree of protection		IP55	
Markings		CE, UL, CSA, EAC	
Insulation class/Temperature		F/80°K	
Duty type		Continuous - S1 Variable - suitable for inverter use (30-50 Hz)	
Temperature sensors		PTC, available as option	

Arrangement

Model	Close-coupled N
Dimensions	357 x 805 x 475 mm (14 x 31 x 18")
Coating	Polyurethane enamel, average thickness of 100 µm
Color	RAL 5010 blue (standard)
Features	Close-coupled with rigid coupling “N”
Height connection	0,3 m (12")

Optionals

Flanged ports DN50 PN16 EN1092-2 Type B	cod. 10042783
Flanged ports 2” ANSI B16.1 Class 125 R.F.	cod. 10042818
Automatic mechanical seal greaser	cod. 10008316
Integrated VSD motor inverter	Available by 2021

Weight

Net weight	119 kg

JE 2-170 G10 NT20

DIMENSIONS

mm [in]

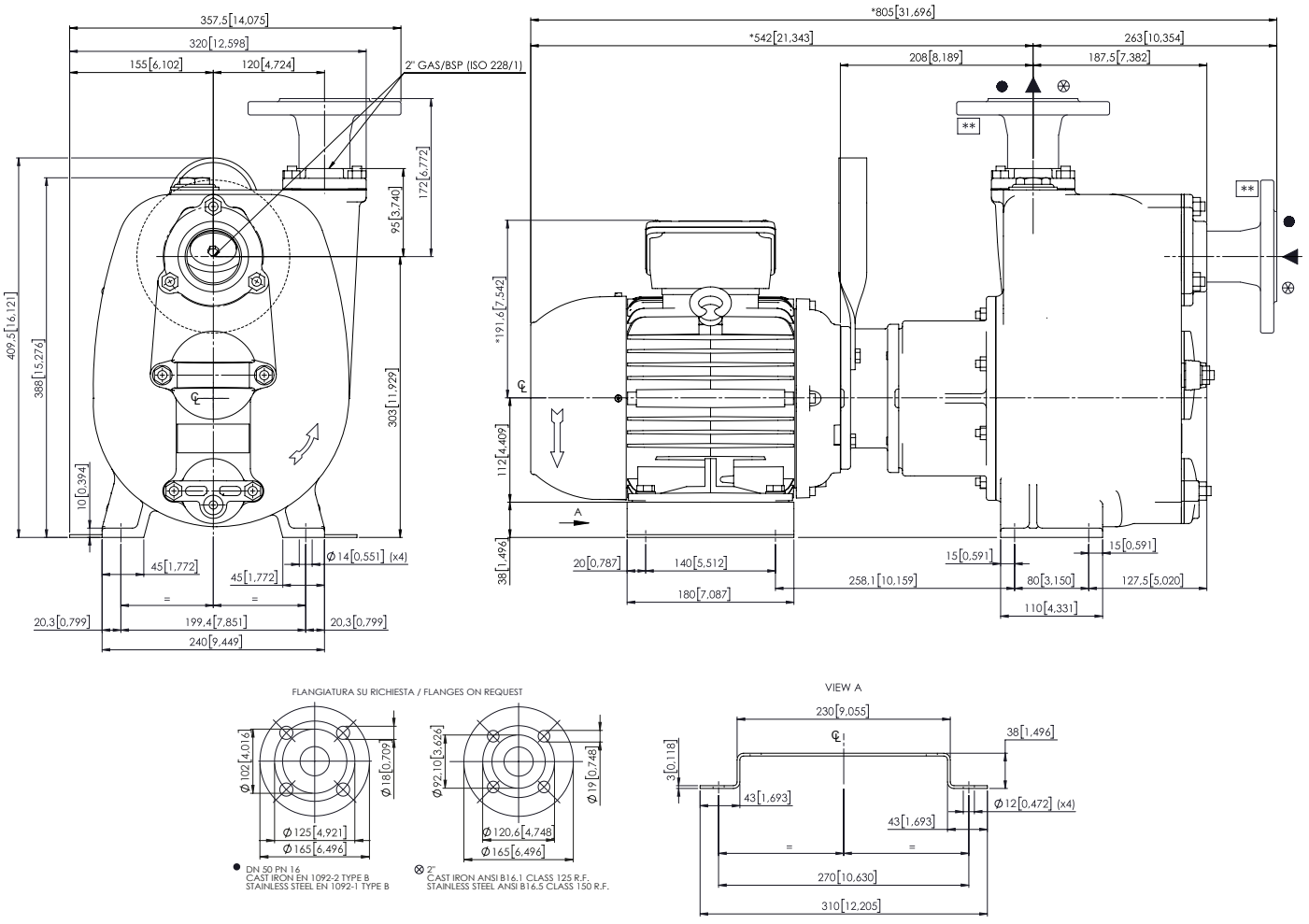

PACKAGING DIMENSIONS

Dimensions

JE 2-170 G10 NT20 (L x W x H mm)	720 x 270 x 480 + BOX
Gross weight (pump + packing)	129 Kg

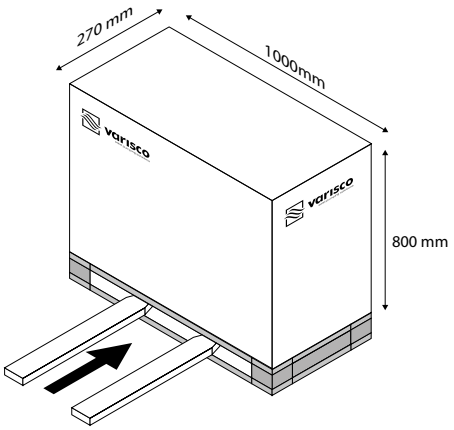

Data sheet: codice 8381063545 © Varisco S.r.l. 2021
Specification is subject to change without prior notice. Please check with your Varisco representative for the latest specifications.

HEMPEL Antriebs Technik
+49 (2154) 4989-37 . pumpen@hem-net.de
www.varisco.it